Korea Technology and Information Promotion Agency for SMEs

(max 10 pages)

Technology Proposal for 2026 TIPA* International Joint R&D Program

(TIPA: Korea Technology and Information Promotion Agency for SMEs)

The objective of this Technology Proposal is to introduce the institute's proprietary technologies and present potential collaborative areas for Korean SMEs, facilitating joint research and development projects under the 2026 TIPA International Joint R&D Program. This Technology Proposal will be publicly disclosed in conjunction with the official announcement of the 2026 TIPA International Joint R&D Program.

1. Technology Proposer Information

Proposer	Name	Mark Courage	Email	mark.courage@tno.nl
Institute Name	TNO (Netherlands Organisation for Applied Scientific Research)			
Address	Stieltjesweg 1, 2628 CK Delft, The Netherlands			

2. Technology Overview

Title of Proposed Technology	Multi-function high-speed optical displacement sensor with nanometer resolution and feature for optical layer thickness change measurement.			
Korea's 12 National Strategic Technology Fields	Semiconductor/Display (√), Secondary Battery ( ), Advanced Mobility ( ), Next-gen Nuclear Power ( ), Advanced Bio ( ), Aerospace/Marine ( ), Hydrogen ( ), Cybersecurity ( ), AI ( ), Next-gen Communication ( ), Advanced Robotics & Manufacturing (√), Quantum ( )			
Industrial Technology Classification [1)]	**Technology Field 1** (Large Category)		**Technology Field 2** (Large Category)	
	Electrical and electronics		Electrical and electronics	
	Medium Category	Small Category	Medium Category	Small Category
	Measuring Instruments	Optical Measuring Instruments	Semiconductor Equipment	Measurement/Inspection Equipment
Concept of Proposed Technology	The proposed sensor is based on fiber optic interferometer technology to enable contactless target displacement measurement down to **nanometer** resolution. The system can be modified to target layer thickness variation measurement by adapting exchanging sub-modules in the sensor system. Measurement of thin target sample of about 500 micrometer thickness has been demonstrated. The proposed displacement sensor is based on fiber interferometer technology [1] (Fig. 1 left) which includes an optical interferometer sensor head and photonics module with light source and detector. TNO invented a design to enable a miniaturized sensor head suitable for installation in difficult accessible and/or harsh environments. The sensor head is connected using an optical fiber to the **photonics detection module** by using a patented configuration (Fig. 1 middle) [2]. A miniaturized sensor head for displacement measurement is demonstrated (Fig. 1 right) [3, 4] for installation in difficult accessible and/or harsh locations [4].			

(max 10 pages)

Rationale for Joint R&D Project

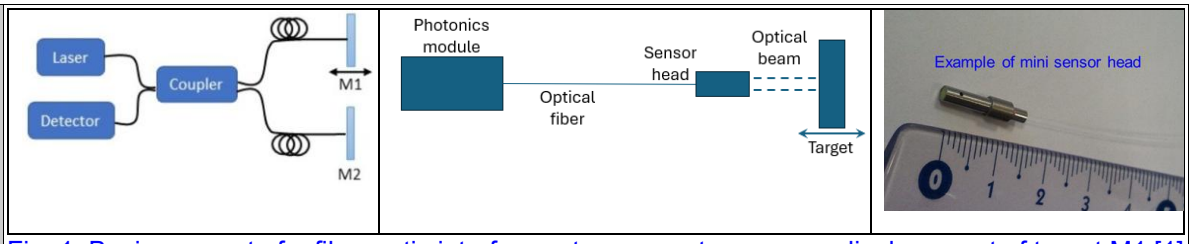

Fig. 1: Basic concept of a fiber optic interferometer sensor to measure displacement of target M1 [1] (left); The proposed concept to enable separated miniaturized sensor head [2] (middle); Example of miniaturized fiber optic sensor head [3] (right).

Contactless displacement and position sensors are widely used in applications varying from construction of large structures, monitoring of scientific instruments (e.g. Very Large Telescope (VLT)), high precision manufacturing to lithography machines. High performance displacement sensor can achieve resolution down to sub-nm and is indispensable for **high-end industrial applications e.g. semicon, photonics and optoelectronics manufacturing, thin-film production and high-precision manufacturing**. Such sensor will enhance the accuracy in the research, the production and the products. With the increasing grow of these industries, higher demand for high end displacement sensor with **improving performance, lower cost and easy implementation of special features/functionality** is expected. Implementation of adequate sensor can **improve the product quality, the production speed/efficiency, support the next-generation product development and hence the competition/strategic position of the company**.

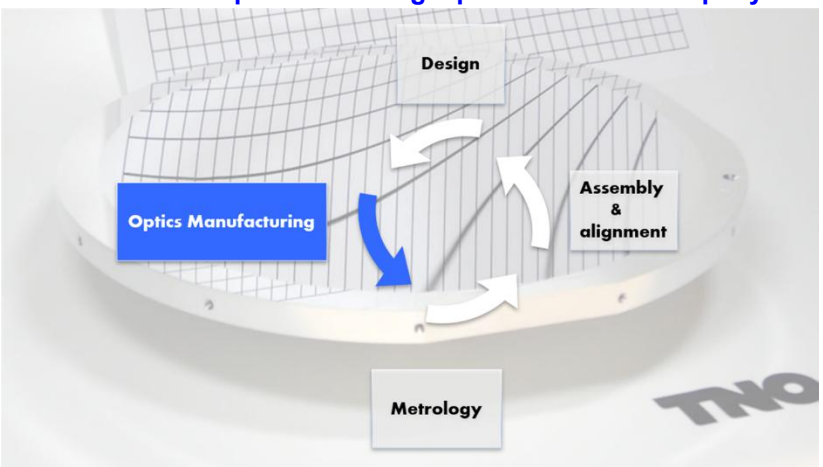

Fig. 2. High precision surface manucturing and metrology at TNO.

The proposed fiber interferometric displacement sensing technology demonstrated high performance in combination with a small sensor head. Furthermore, it includes a unique feature that using limited modification the system can be used for thickness variation measurement. Commercialization of this technology will be beneficial to different high precision industries. Korea is strong in photonics research/components, high-precision manufacturing, display and semicon industry. Collaborating with Korean partners enables the **effective identification of target launch applications**, **enhances development efficiency**, and **accelerates time-to-market for the technology**.

Optical interferometer [1] is one of the key technologies for high performance position/displacement sensor and provides (the combination of) high resolution, high-speed, large dynamic range non-contact measurement. Different conventional interferometer configurations (including Michelson, Mach-Zehnder, Fabry-Perot, white light interferometer [5]) are known. Most of them have a complex sensor head which is sensitive to environmental influence. The TNO interferometer configuration enables a simple and small sensor head, a standard telecom optical fiber for connection and a separated photonics module to reduce the environmental influence at the measurement location and enable proper insulation and packaging of the optical parts in the photonics module. Measurement

	using the proposed system unsusceptible to Electro-Magnetic Interference (EMI) by connecting the mini optical sensor head with optical fiber to a remotely located measurement system. Current status of TNO technology is a patent family and application for different scientific projects varying from space, semicon, metrology and precision optics inspection. For each project, the total system is optimized to achieve the required performance in the dedicated combination of sensitivity, accuracy, sampling speed, dynamic range, etc. The extension of the technology for layer thickness change measurement is also demonstrated. The market for displacement measurement is expected to be larger, and the displacement configuration is selected as default for this proposal. For the commercialization of the technology, a launching system for a selected application with the key specifications need to be defined and demonstrated by a prototype. The key specifications are: - Sensor head dimension - Displacement resolution - Displacement accuracy - Total sensor system drift Real time signal processing is relevant for in-line measurement or close-loop application of the system. However, the required electronic hardware development depends strongly on the dedicated integration of the measurement system into the system of the application. Therefore, the real-time signal processing is not included in the current sensor system research and development. TNO holds the key IPs, dedicated tools and engineering methods for the proposed fiber optic displacement sensor system. TNO as research organization has about 80 years history in different field of technology and the required advanced testing labs and facilities. This includes more than 40 years Know-Hows in Fiber Optics Sensor technologies for different applications varying from defense, space, energy, etc. This resulted in > 25 patents and >90 publications about fiber optic sensing. For the development of a series production system, technology and know-how transfer to a commercial partner is needed. The commercial partner will perform the market selection, technology and prototype development, future system production and commercialization. The technology is based on interferometry which requires dedicated knowledge in optics and photonics from the Korean partner.
Key Words	1. Sensor (displacement and layer thickness) 2. Photonics 3. Fiber optics 4. Interferometry 5. Metrology

(max 10 pages)

3. Research and Development Objectives & Plan

Technology Readiness Level (TRL)[2]	Start of the Project	Level (3-4)	End of the Project	Level (7)

R&D Objectives

Development of a fiber optic based sensor system for measuring in-line target nanometer sensitivity displacement or layer thickness change measurement with a miniaturized sensor head.

Research and Development of a prototype displacement sensor system with the targeted specifications for a launching application based on a market evaluation. The system consists of a miniaturized optical sensor head, a connection cable with standard COTS telecom optical fiber and a photonics interrogation module which includes the photonics parts, detectors, ADC and computer.

Different versions of the proposed technology (see Fig. 1) are optimized for application in different research projects. Typical results of displacement measurement resolution, speed and system drift are shown in Figure 3.

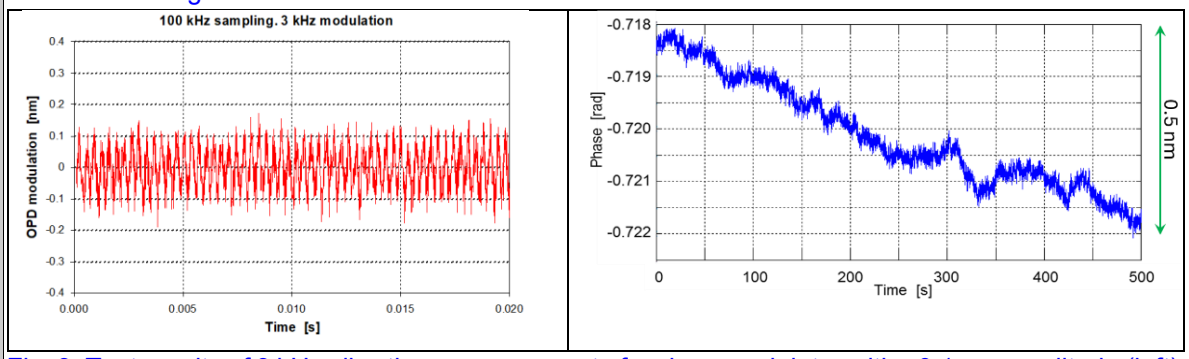

Fig. 3: Test results of 3 kHz vibration measurement of a piezo modulator with ~0.1 nm amplitude (left). System drift measurement for > 8 minutes (500 s) shown about 0.5 nm signal drift on the right axis [3] (right).

An example of special application is the implementation of 3 fiber optic displacement sensors in a measurement instrument for high accuracy measurement and control of the position and orientation of the optical element or positioning stage in a near-field optical imaging microscope [4] (Fig. 4).

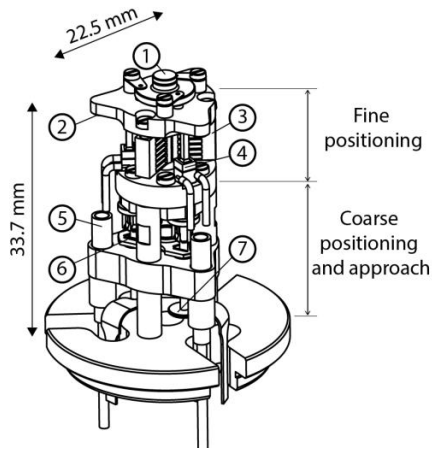

Fig. 4 Application of the fiber interferometer (5) to control the position and orientation of the optical element or positioning stage (1) for near-field optical imaging microscope [4].

By using light for interferometric measurement, the speed of the measurement mainly depends on the speed of the detector and the signal processing electronics. Thanks to telecom and computer chip development, high speed measurement systems can be developed with commercial of the shelf

(COTS) low-cost component. **The measurement system can be used for position control system in high precision manufacturing industry, semiconductor industry, monitoring system for scientific instruments/structure, …**

By modification of some parts in the proposed configuration, the functionality of the system can be changed to measure the thickness variation of a (semi)transparent target with nm resolution [6]. The performance of this layer thickness change measurement system is demonstrated by a wedged transparent ZERODUR sample. The thickness of the wedged sample changes from ~464 μm to ~474 μm over 25 mm. The thickness variation measurement of the wedge is demonstrated with a resolution of about 1 nm and a system drift of about 0.5 nm over 300 seconds which is in the same range of the displacement measurement.

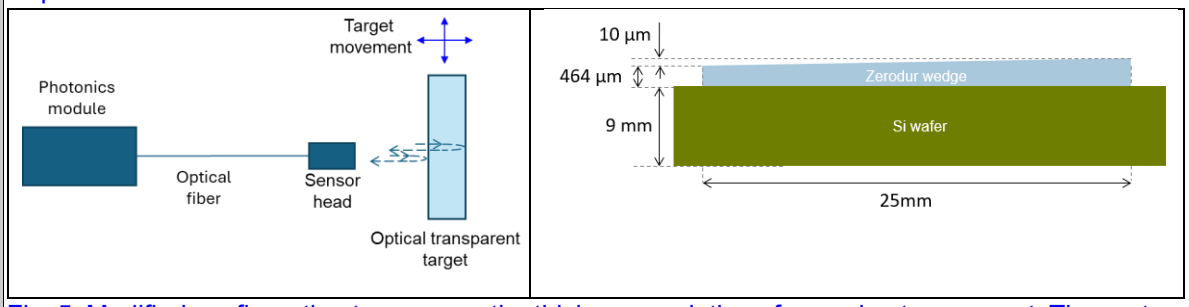

Fig. 5: Modified configuration to measure the thickness variation of a moving transparent. The system is designed to be insensitive to target movement in the direction of the sensor (left); A transparent wedged ZERODUR sample to demonstrate the thickness change measurement.

The unique feature of this patented [6] optical layer thickness configuration is unsusceptible to the target movement in the direction of the measurement beam. This makes the sensor suitable for in-line product thickness variation monitoring in production e.g. for thin film or display industry. Using proper real time processing, the system can be used for feedback process control for e.g. membrane, thin layer, role-to-role production. Another possible feature is the measurement on non-mirror surface for 3D displacement measurement [7].

R&D Target Specifications

The proposed system aims for the high-end displacement applications. Based on the experience gained from the different lab measurements, the following target specifications are expected to be feasible:

- Sensor head dimension: ~25 mm length x ~10 mm diameter
- Connection fiber length: > 50 m
- Displacement resolution: < 1 nm
- Displacement accuracy: < 10 nm with standard calibration
- Total sensor system drift: < 5 nm over 1 hr.
- Maximum detection bandwidth: 1 MHz

The final combination target specifications will depend on the selected launching application and agreed at the first work package of the project.

Each of the specifications will be tested individually with the demonstrator using a dedicated test setup. The combination of the specifications depends on the detailed design and components used in the prototype. The prototype will be tested under representative conditions of the **selected use case**.

The main research topics in the proposed projects are:

- The research to achieve the target specifications for system design
- The research of the critical components, parts and calibration
- The investigation of the robust design of the sensor head and proper packaging of the photonics interrogation module

R&D Plan

The activities in this R&D project are divided into the following Work Packages (WP) with the duration of the WP, the Milestones (MS) and the Deliverables (D).

(max 10 pages)

WP1 Information transfer and market evaluation (for the selection of the use case and the corresponding target specifications) [M1 – M4]

Within this WP, **TNO** will prepare, document and share detail background information of the IP and setups tested with the Korean partner. This information includes the components used and test experimental results of both the displacement and the layer thickness change measurement configurations **(D1)**. The **Korean partner** will evaluate the different markets and application among others for the high precision manufacturing, display, photonics and semiconductor industries. A launching application will be agreed **(MS1)**and use case for testing the prototype under representative conditions will be selected. Test facility of the use case will be evaluated and arranged (e.g. external industrial parties) by the **Korean partner**. The results of the market evaluation and use case selection results will be reported. **(D2)**

WP2 Research and Design of the demonstrator system according to the target specifications [M3-M7]

Based on the selected launching application and the use case, the target specifications of the system will be defined in detail **(TNO + Korean partner)**. The configuration of the system will be designed to meet the target specifications **(TNO)**. The demonstrator system will focus on the miniaturized sensor head design for the use case. The **photonics interrogation module including the detector, ADC and computer** can be installed at a distance from the measurement location and hence will have relaxed requirements for dimension, isolation and components used for the demonstrator.

WP3 Integration, test, calibration and analyze the performance of the COTS component based demonstrator system [M7-M12]

Using the system design from WP2, components and parts based on as much as possible COTS products will be selected for demonstrator system. The demonstrator system will be integrated **(TNO with input from Korean Partner)** and signal processing software will be developed based on existing algorithms used by TNO for off-line batch data processing **(TNO + Korean partner).** The algorithm converts the interferometer sensor data to the displacement data. Setups for calibration and test of the different specifications will be design and realized **(TNO + Korean partner**). The performance of the demonstrator will be evaluated using the measurement data from the different tests to verify the target specifications. Issues of the demonstrator system will be identified, and solutions will be proposed for implementation in the prototype system. Relation between the different specifications will be investigated for future system design optimization. The results of WP3 will be reported together with the demonstrator detail design from WP2 **(D3, MS2).**

WP4 Detail design, components selection and integration of the prototype [M11-M17]

The prototype for the selected use case will be designed and configurated based on the experience and test results of the demonstrator. The COTS component and the parts in the system will be investigated and improved if required. Additional research attention will be paid to the packaging of the **sensor head** and the **photonics interrogation module** to improve the robustness and the isolation of environmental effects **(TNO and Korean partner)**. The operation procedure of the system will be fine-tuned if required **(TNO)**. The prototype system will be integrated and calibrated using procedures used for the demonstrator system **(TNO + Korean partner) (D4)**.

WP5 Test of prototype under representative conditions of the selected use case [M18-M22]

The prototype system will be tested for the use case arranged by the **Korean partner** under representative practical conditions **(Korean partner + TNO)**. The specifications of the prototype system under different operational conditions will be tested and investigated. Long term data will be collected to identify the stability of the measurement data quality and the mechanical robustness of the system. Improvements for future product and product line

	development will be identified. Test results of WP5 will be reported together with the WP4 prototype design **(D5, MS3)**. **WP6 Roadmap for product and product line development [M22-M24]** Based on the prototype performance (WP5), the information of the different TNO test setups for displacement and/or layer thickness measurement and the market research results of WP1, the roadmap for the launching product manufacturing and future product line will be developed and reported **(Koran partner + TNO) (D6)**. WP7 Project management [M1-M24]

4. R&R (Roles and Responsibilities)

Expected R&R of Research Institute	TNO will provide expertise, knowledge, design, calibration and testing for the different stages of sensor development. This includes the components used, the data processing algorithm, test experimental results of both the displacement and the layer thickness change measurement configurations and the target applications. The R&R of TNO for the main tasks in the different WPs are: WP1: Info transfer and selection of launching application (WP leader: t.b.d.) - TNO will be ***responsible*** for knowledge and information sharing. - TNO will ***support*** the market evaluation for the selection of the launching application. WP2: Demonstrator design and integration(WP leader: TNO) - TNO will be ***responsible*** for the transfer of the key specifications into the detail design, selection of components/parts and the realization of the demonstrator system. WP3: Demonstrator test (WP leader: TNO) - TNO will be ***responsible*** for the testing of the demonstrator according to the key specifications. WP4: Prototype design and integration (WP leader: TNO) - TNO will be ***responsible*** for the transfer of experience from the demonstrator to the design of the prototype, selecting the components and integration of the prototype system. WP5: Prototype test (WP leader: Korean partner) - TNO will ***support*** the preparation of the use case test program, the execution of the test program and analysis of the test result. WP6: Roadmap product development (WP leader: Korean partner) - TNO will support the evaluation of the product roadmap, the supply chain evaluation and product line. WP7: Project Management (WP leader: t.b.d.)
Expected R&R of Korean SME Partner	Role of partner : market analysis, target requirements, components selection and roadmap for key component optimization with Korean suppliers or institutes e.g. KAIST for future mass production and product line expansion. The R&R of the Korean partner for the main tasks in the different WPs are: WP1: Info transfer and selection of launching application (WP leader: t.b.d.) - Korean partner will be ***responsible*** for the transfer of technical information provided by TNO to key features and the market research to identify the launching application. - Korean partner will be ***responsible*** for the use case test facility for the prototype test. WP2: Demonstrator design and integration(WP leader: TNO) - Korean partner will be ***responsible*** for the transfer of the launching application to the key specifications.

	WP3: Demonstrator test (WP leader: TNO) - Korean partner will ***support*** the evaluation of the calibration, test plan and test results. WP4: Prototype design and integration (WP leader: TNO) - Korean partner will ***support*** the design of the prototype, selecting the components and integration of the prototype system. WP5: Prototype test (WP leader: Korean partner) - Korean partner will be ***responsible*** for the preparation of the use case test program, the execution of the test program and analysis of the test result. WP6: Roadmap product development (WP leader: Korean partner) - Korean partner will be ***responsible*** for the evaluation of the product roadmap, the supply chain evaluation and product line. WP7: Project Management (WP leader: t.b.d.)

5. Expected Outcomes/Impact

Expected Outcomes and Impact	The main outcomes of this R&D project is a prototype fiber optic interferometric displacement sensor with a miniaturized sensor head dedicated to the selected launching application and the target specifications. The development of the prototype will pave the way for commercialization of this system including the product line for other applications in high precision industries, scientific researches and layer thickness change sensor for role-to-role inspection and production industries. With the sub-nm resolution, these sensor can enhance the accuracy and contribute to future advanced research and product manufacturing.

6. References

(1) https://www.pyroistech.com/fiber-optic-interferometers/

(2) Interferometric distance sensing device and method. (US9791259(B2), WO2014171825(A1)).

(3) L.K. Cheng et al., “Fiber interferometer combining sub-nm displacement resolution with miniaturized sensor head”, International conference on Optical Fiber Sensor OFS-25, Proc. of SPIE, Vol. 10323, 2017.

(4) R.J.F. Bijster, et al., “Meta-instrument: high speed positioning and tracking platform for near-field optical imaging microscopes”, http://arXiv.org/abs/1608.04281, 2016.

(5) Bruker White Light Interferometer WLI Semi Metrology | Bruker.

(6) Optical thickness measuring device and method. (WO2017058021 (A1)).

(7) Device and method for interferometric measurement of a two- or three-dimensional translation of an object. (US11493325(B2), WO2020040640(A1)

(max 10 pages)

☐ Terms:

1) Industrial Technology Classification

· Classification system according to Industrial Technology Classification Table (**Appendix 1**, based on Article 16 of the Common Operational Guidelines for the Industrial Technology Innovation Project in Korea).

2) Technology Readiness Level (TRL)

Description		
·A consistent and objective indicator of the technological maturity of key element technologies		
	Basic Research Stage (1-2)	1st Stage: Basic theories and experiments 2nd Stage: Proof of Concept, such as practical ideas or patents
	Experimental Stage (3-4)	3rd Stage: Verification of basic performance at a laboratory scale 4th Stage: Evaluation of key performance of materials, components, and systems at a laboratory scale
	Prototype Stage (5-6)	5th Stage: Production and performance evaluation of prototypes of finalized materials, components, and systems 6th Stage: Production and performance evaluation of prototypes at a pilot scale
	Productization Stage (7-8)	7th Stage: Reliability testing and evaluation by potential customers 8th Stage: Prototype certification and standardization
	Commercialization Stage (9)	9th Stage: Commercialization